TECO	OUTLINE DIMENSIONS 3-PHASE INDUCTION MOTOR	FRAME NO : D63

POLE	kW	HP	SYNC RPM
2	0.18	0.25	2730
2	0.25	0.34	2730
4	0.18	0.25	1400

Totally Enclosed Fan-Cooled Type, Squirrel-Cage Rotor.

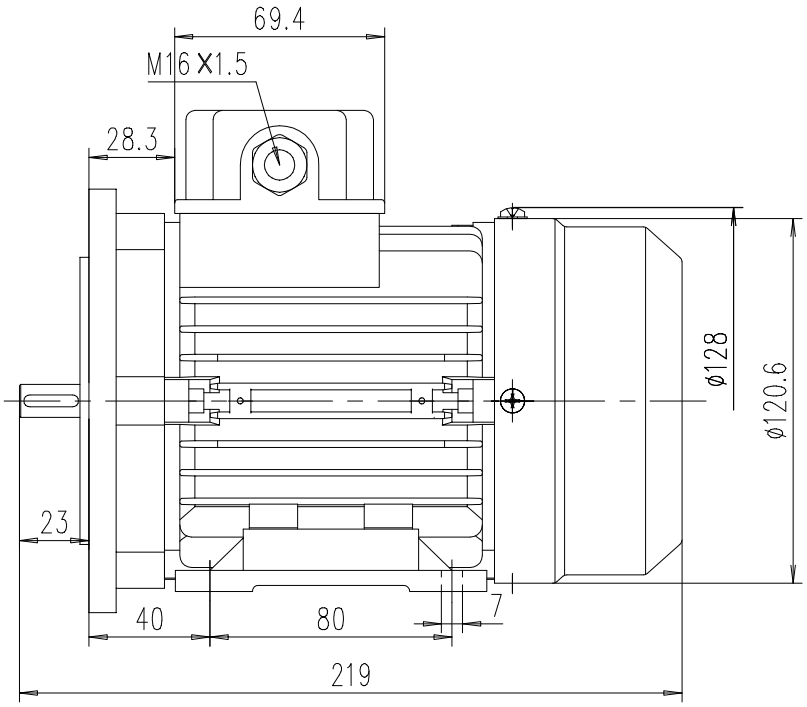

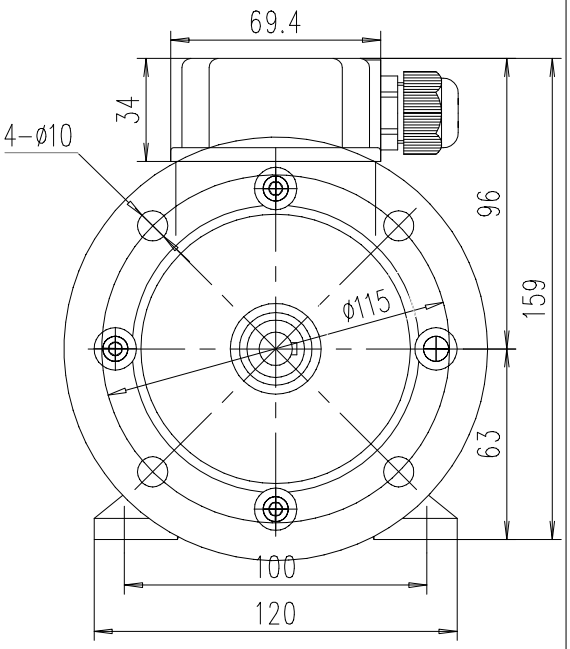

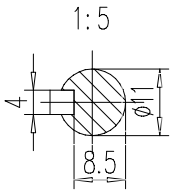

NOTES:
1. DIMENSIONS IN mm.
2. SCALE 1: 2.5.
3. FOOT MOUNTED IM2001.
4. FOR DIRECT DRIVE ONLY.
5. IP55 PROTECTION.

MAX ALLOY

DWN.	DP	16.12.24	REV : 00
CHKD.	AN	16.12.24	
APPD.	JC	16.12.24	